Multisensor - Professional Line

True Presence Multisensor Aerosol KNX

V3.0
EAN 4007841 079208
Article number 079208
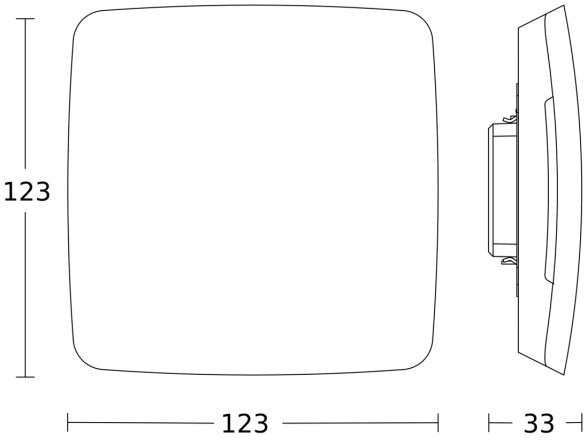
Dimension Drawing